LOOK: AURORA

REFERENCE: AUR-FRM-006

ROVALUX

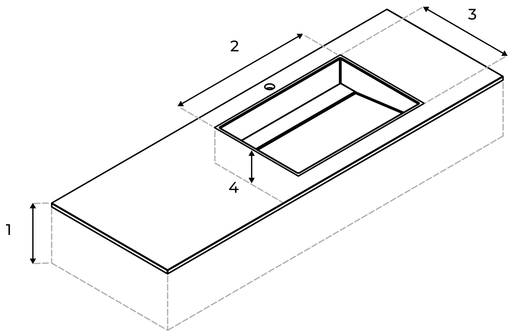

1 - Countertop thickness	Slim 1.2 cm - Bold 12 cm
2 - Basin length	35 to 80 cm - Customizable
3 - Basin width	25 to 50 cm - Customizable
4 - Basin depth	10 to 20 cm - Customizable
5 - Water tap hole	⌀ 3.5 cm - Optional
6 - Sink drain	⌀ 4-5 cm

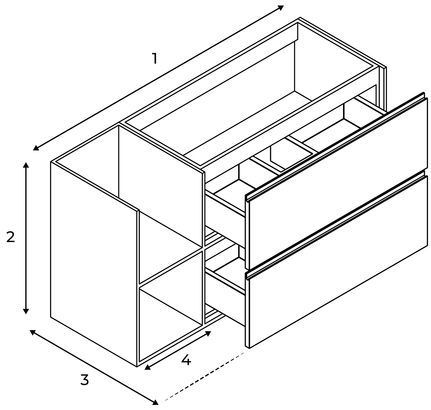

1 - Product lenght	90 to 130 cm - Customizable
2 - Drawer height	53 to 70 cm - Customizable
3 - Product width	40 to 55 cm - Customizable
4 - Shelf lenght	30 cm

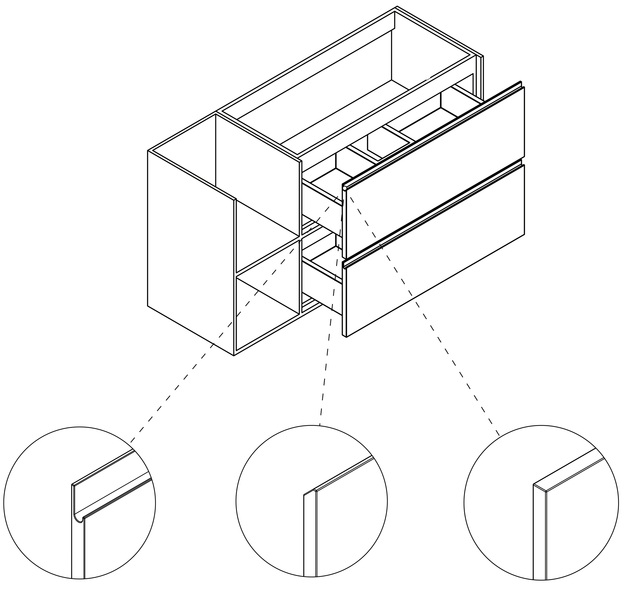

1 - Curved 2 - Beveled 45° 3 - Push to open