LOOK: STRIA

REFERENCE: STR-005

ROVALUX

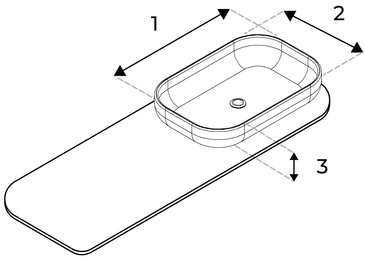

1 - Basin length	35 to 80 cm - Customizable
2 - Basin width	25 to 50 cm - Customizable
3 - Basin depth	10 to 20 cm - Customizable
4 - Water tap hole	⌀ 3.5 cm - Optional
5 - Sink drain	⌀ 4-5 cm

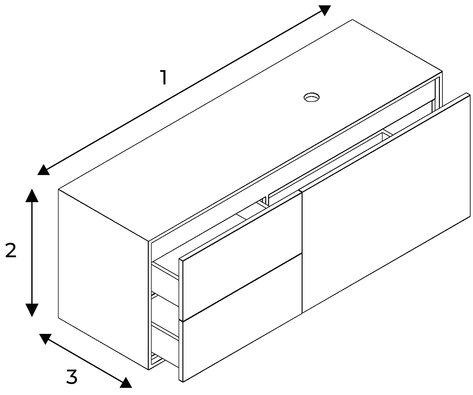

1 - Product lenght	120 to 150 cm - Customizable
2 - Drawer height	50 to 65 cm - Customizable
3 - Product width	42 to 55 cm - Customizable

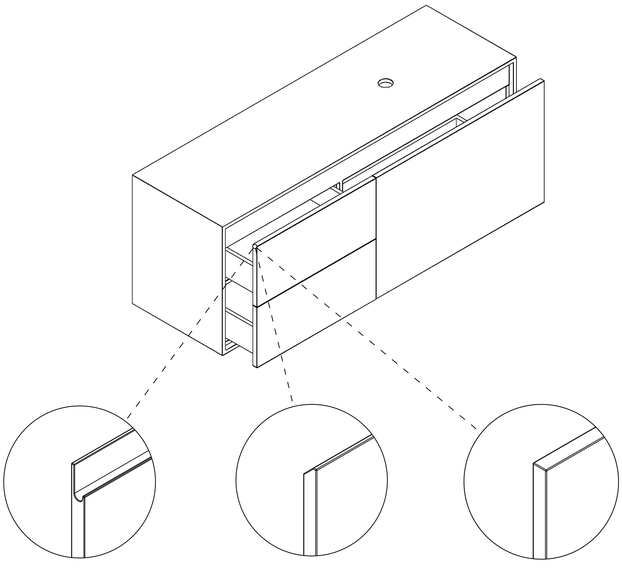

1 - Curved

2 - Beveled 45°

3 - Push to open